Power Amplifier Module for Headphones
"Тихоня"

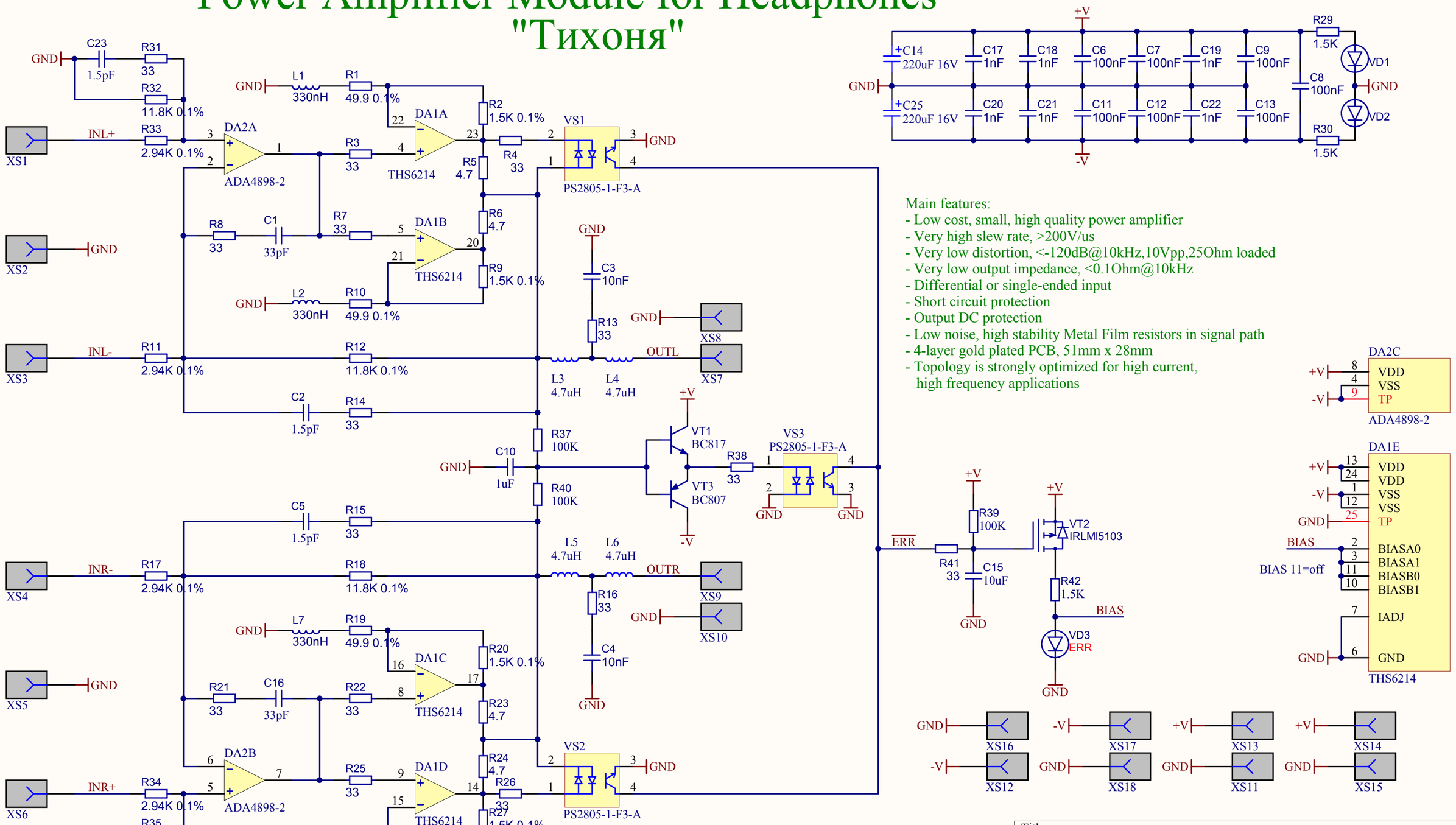

Main features:
- Low cost, small, high quality power amplifier
- Very high slew rate, >200V/us
- Very low distortion, <-120dB@10kHz,10Vpp,25Ohm loaded
- Very low output impedance, <0.1Ohm@10kHz
- Differential or single-ended input
- Short circuit protection
- Output DC protection
- Low noise, high stability Metal Film resistors in signal path
- 4-layer gold plated PCB, 51mm x 28mm
- Topology is strongly optimized for high current, high frequency applications

Author: Pavel Guryev (Павел Гурьев) p.guryev@oriel.ru

Title		
Size A4	Number	Revision
Date: 3/12/2012		Sheet of
File: D:\WORK\..\A1 module v1.0a.SchDoc		Drawn By: